REFRACTORY SPECIFICATION for H-2201				
ITEM	ZONE	REFRACTORY	THK	ANCHORS
1a	RADIANT FLOOR	CASTABLE ASTM C401 CL. O LICOFEST PC 124 I	200	C.S. - "V" TYPE
1b		FIREBRICKS ASTM C401 27HD MAREF 45Y	65	-
2a	RADIANT WALL	GREEN CER. FIBER 96 kg/m3 LM ECO 1200	50	AISI 310 - "J" TYPE
2b		GREEN CER. FIBER 128 kg/m3 LM ECO 1200	50	
3a	RADIANT ARCH	GREEN CER. FIBER 96 kg/m3 LM ECO 1200	75	AISI 310 - "J" TYPE
3b		GREEN CER. FIBER 128 kg/m3 LM ECO 1200	50	
5	CONVECTION WALL	CASTABLE ASTM C401 CL. O LICOFEST PC 124 I	150	AISI 304 - "V" TYPE
6	BREECHING	CASTABLE ASTM C401 CL. O LICOFEST PC 124 I	75	C.S. - "V" TYPE
7	END TUBE SHEETS	CASTABLE ASTM C401 CL. O LICOFEST PC 124 I	100	AISI 304 - "V" TYPE
8	HEADER BOXES	CASTABLE ASTM C401 CL. O LICOFEST PC 124 I	50	C.S. - "V" TYPE
9	STACK	CASTABLE ASTM C401 CL. Q LICOFEST LW 203 CH	50	C.S. - "V" TYPE
10	EXPANSION JOINTS	GREEN CER. FIBER 96 kg/m3 LM ECO 1200	1/2"	-
11	RADIANT ARCH	GREEN CER. FIBER 96 kg/m3 STRIPS 230x75 - LM ECO 1200	1/2"	-
12	FLOOR - GAP FILLING	CASTABLE ASTM C401 CL. Q LICOFEST PC 14 HT	65	-

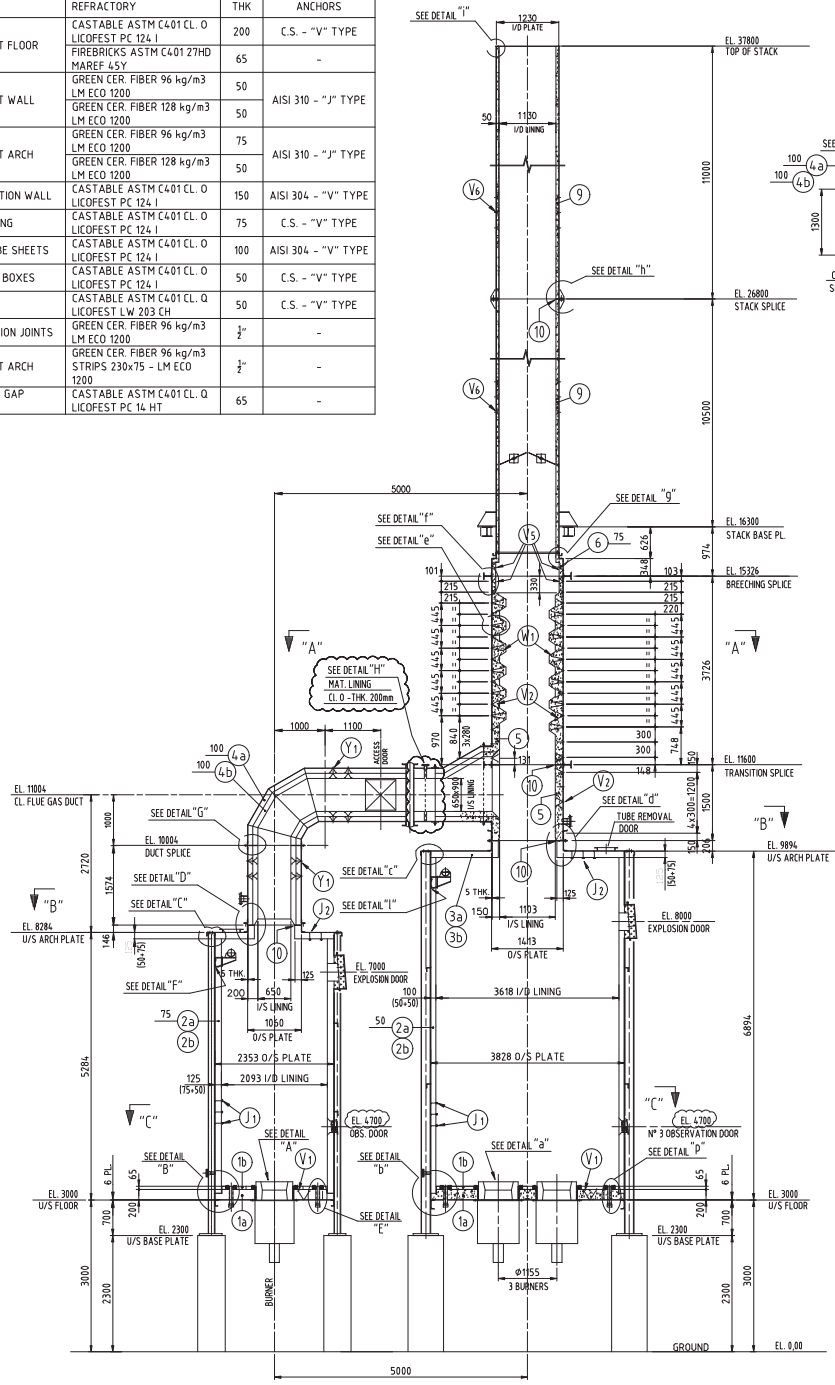

ELEVATION
(VIEW FROM 180° SIDE)

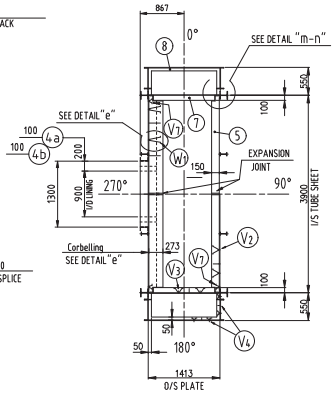

SECTION "A-A"

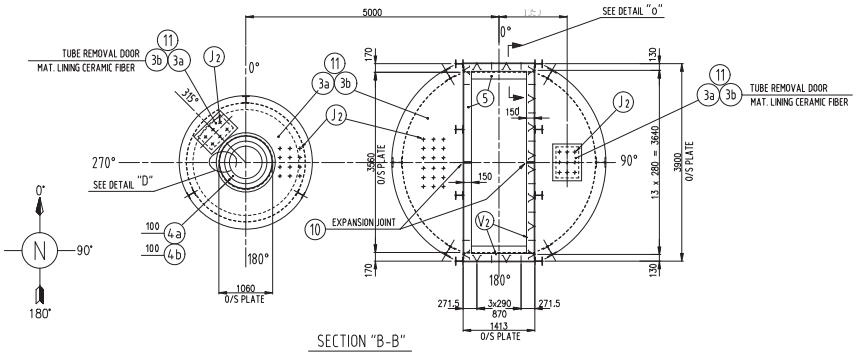

SECTION "B-B"

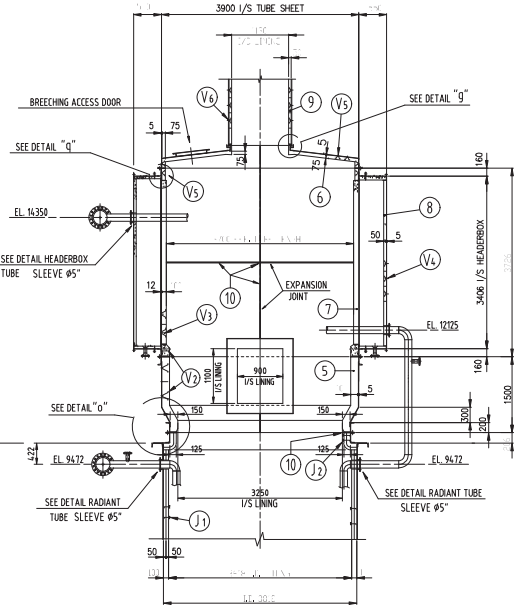

SECTION ELEVATION
(VIEW FROM 270° SIDE)

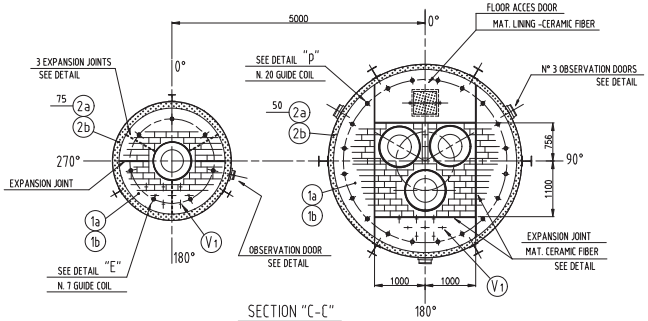

SECTION "C-C"

REFRACTORY SPECIFICATION for H-2202				
ITEM	ZONE	REFRACTORY	THK	ANCHORS
1a	RADIANT FLOOR	CASTABLE ASTM C401 CL. O LICOFEST PC 124 I	200	C.S. - "V" TYPE
1b		FIREBRICKS ASTM C401 27HD MAREF 45Y	65	-
2a	RADIANT WALL	GREEN CER. FIBER 96 kg/m3 LM ECO 1200	75	AISI 310 - "J" TYPE
2b		GREEN CER. FIBER 128 kg/m3 LM ECO 1200	50	
3a	RADIANT ARCH	GREEN CER. FIBER 96 kg/m3 LM ECO 1200	75	AISI 310 - "J" TYPE
3b		GREEN CER. FIBER 128 kg/m3 LM ECO 1200	50	
4a	DUCT TO H-2201	CASTABLE ASTM C401 CL. N LICOFEST PC 105	100	AISI 304 - "Y" TYPE
4b		CASTABLE ASTM C401 CL. O LICOFEST PC 124 I	100	
10	EXP. JOINTS	GREEN CER. FIBER 96 kg/m3 LM ECO 1200	1/2"	-
11	RADIANT ARCH	GREEN CER. FIBER 96 kg/m3 STRIPS 230x75 LM ECO 1200	1/2"	-
12	FLOOR - GAP FILLING	CASTABLE ASTM C401 CL. Q LICOFEST PC 14 HT	65	-

GENERAL NOTES

1 - FOR "LINING DETAILS" SEE DRAWING N° 870-A1-0101 Sh. 2 & 3
2 - FOR "GENERAL ARRANGEMENT " SEE DRAWING N° 870-A1-0020
3 - FOR ANCHOR DETAILS AND DIMENSIONS SEE DWG. "LINING ANCHORS" N° 870-A1-0220
4 - FOR LINING ON INSTRUMENT CONNECTIONS SEE DRAWING N° 870-A1-0460
5 - FIREBRICKS SHALL BE INSTALLED AT SITE AFTER BURNER INSTALLATION
6 - ALL FLANGED CONNECTIONS SHALL BE PROVIDED WITH LADDER TYPE CERAMIC WEBBING GASKET 5 mm THK. 50mm WIDE - THE GASKET SHALL BE GLUED TO ONE OF THE FLANGES WITH HEAT RESISTANT MASTIC DURING INSTALLATION AT WORKSHOP OR SITE (SEE DRAWING).
7 - OVERLAPS IN THE HOT FACE SHALL BE IN THE DIRECTION OF THE GAS FLOW OVERLAPS TO BE PROVIDED ON THE HOT FACE LAYER ONLY
8 - WHEN CASTABLE IS INSTALLED IN HORIZONTAL POSITION, THE INDIVIDUAL SECTIONS SHOULD BE AROUND 1m x 1m IN DIMENSION BUT NOT LARGER THAN 1.5m x 1.5m
9 - INSTALLATION SHALL BE GENERALLY IN ACCORDANCE WITH SPECIFICATION FOR LINING INSTALLATION DWG. 870-A4-3210
10 - INTERNAL PAINTING (UNDER CERAMIC FIBER ONLY): ANTACID PAINT 1000 µm DFT

REV.	DATE	DESCRIPTION	DRAWN	CHECKED	AUTHOR.
2	24-05-2017	REVISED DETAIL "H" - ISSUE FOR CONSTRUCTION	ERRECI/GR	MM	MC
1	24-04-2017	ISSUE FOR CONSTRUCTION	ERRECI/GR	MM	MC
0	22-02-2017	ISSUE FOR APPROVAL	ERRECI/GR	MM	MC

vergaengineering
MILAN ITALY

THIS DRAWING AND THE INFORMATION REVEALED BY IT SHALL NOT BE REPRODUCED, COPIED, LENT DISCLOSED EXCEPT AS EXPRESSLY AUTHORIZED IN WRITING BY VERGAENGINEERING S.p.A.

CUSTOMER: ELEKTROBUDOWA for PKN ORLEN
SCALE 1:50
DATE 24-05-17

100,000 MTA PROPYLENE METATHESIS PROJECT
OCT Reactor Feed Heater H-2201
Regeneration Gas Heater H-2202

DRAWN BY ERRECI GR
CHECKED BY MM
AUTHORIZED BY MC

GENERAL ARRANGEMENT FOR LINING

DRG. N° 870-A1-0101 SHEET 1 / 3 REV. 2

File: 870-A1-0101-2 Sh. 1 of 3.dwg - Date stamps: 24-may-17